Model No.DCL282F CORDLESS CLEANER

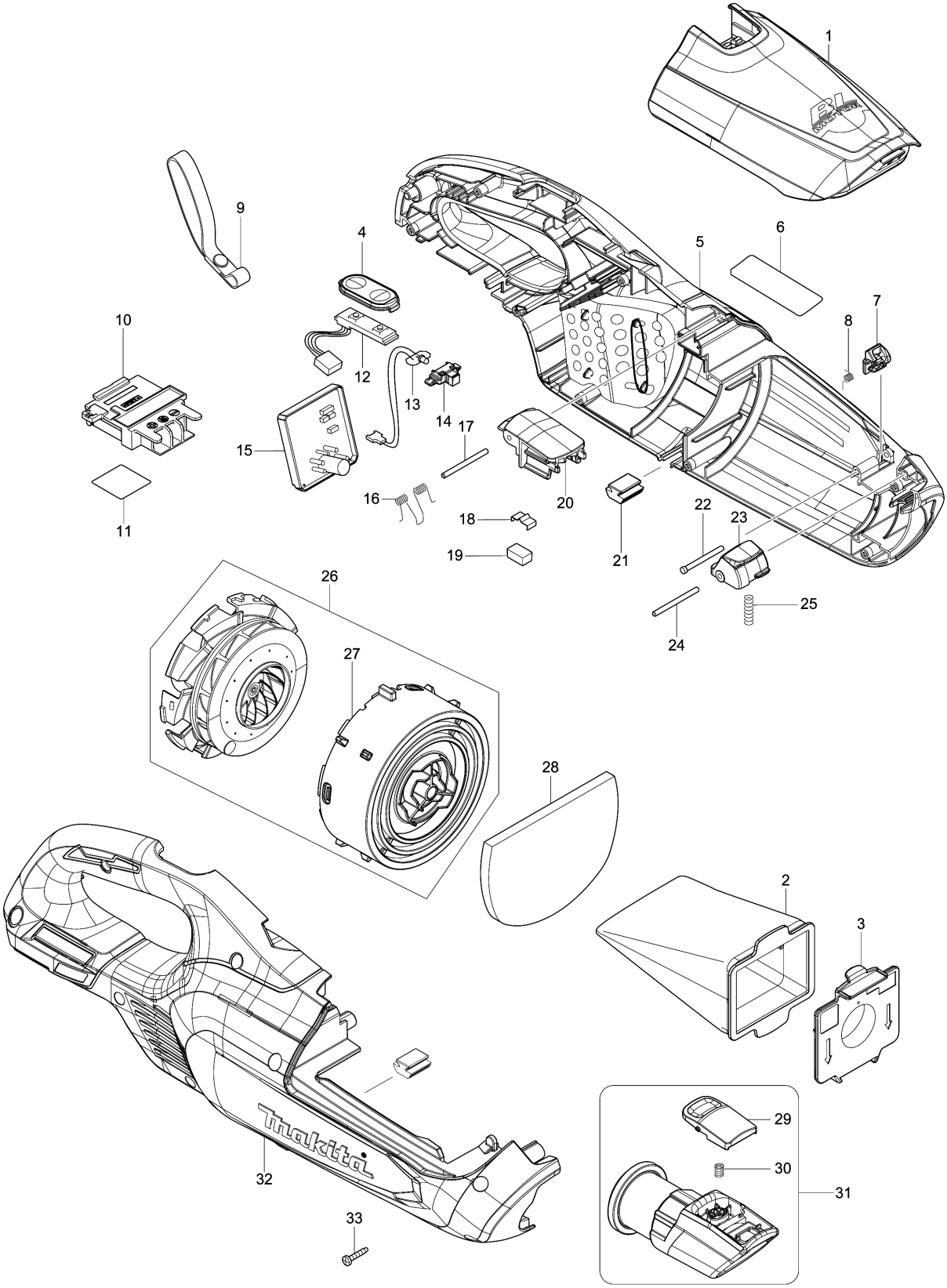

Model No.DCL282F CORDLESS CLEANER

分解圖號	零件編號	品名	交換	數量	New/Old	選擇1	選擇2	註記
001A	140L57-2	FRONT COVER COMPLETE		1				
001B	140L56-4	FRONT COVER COMPLETE		1				
001C	140T70-8	FRONT COVER COMPLETE		1				
C10	424093-7	油封		1				
002	166119-6	DUST BAG		1				
003	140K23-3	VALVE STAY COMPLETE		1				
004	144096-2	開關板		1				
005A	183M11-9	HOUSING SET		1				
005B	183L70-7	HOUSING SET		1				
005C	183P31-1	HOUSING SET		1				
C10	263005-3	橡皮銷 6		2				
C20	422458-7	SPONGE SHEET 55-80		2				
C30	213008-7	O圈 22.4		2				
D10		INC. 21,32						
006	855T39-6	DCL282F NAME PLATE		1				
007A	459352-0	STOPPER PLATE		1				
007B	459327-9	STOPPER PLATE		1				
007C	459302-5	STOPPER PLATE		1				
008	232484-6	TORSION SPRING 4		1				
009	163400-6	手提吊帶 F/6503D,6918D		1				
010	643874-2	端子座		1				
011	855T46-9	DCL282F SERIAL NO. LABEL		1				
012	620A77-1	SWITCH UNIT		1				
013	620A76-3	LED CIRCUIT		1				
014	459478-8	LENS CASE		1				
015	620A75-5	CONTROLLER		1				
016	233580-3	扭轉彈簧4		1				
017	268271-7	銷 3		1				
018	232264-0	鋼板彈簧		1				
019	424367-6	橡膠		1				
020A	459350-4	FRONT COVER JOINT		1				
020B	459330-0	FRONT COVER JOINT		1				
020C	459351-2	FRONT COVER JOINT		1				
021	422460-0	RUBBER PLATE		2				
022	256590-3	FLAT FILLISTER HD. PIN 3		1				
023A	459348-1	BUTTON B		1				
023B	459329-5	BUTTON B		1				
023C	459349-9	BUTTON B		1				
024	268271-7	銷 3		1				
025	233344-5	壓縮彈簧 4		1				

Model No.DCL282F CORDLESS CLEANER

分解圖號	零件編號	品名	交換	數量	New/Old	選擇1	選擇2	註記
026	136092-4	MOTOR ASS'Y		1				
D10		INC. 27						
027	459322-9	FAN COVER		1				
028	424804-0	海綿板70-106		1				
029	458939-5	BUTTON A		1				
030	232485-4	COMPRESSION SPRING 5		1				
031A	136107-7	INLET ASS'Y		1				
031B	136095-8	INLET ASS'Y		1				
031C	136035-6	INLET ASSY		1				
C10	424094-5	盤		1				
D10		INC. 29,30						
032A	183M11-9	HOUSING SET		1				
032B	183L70-7	HOUSING SET		1				
032C	183P31-1	HOUSING SET		1				
C10	263005-3	橡皮銷 6		2				
C20	422458-7	SPONGE SHEET 55-80		2				
C30	213008-7	O圈 22.4		2				
D10		INC. 5,21						
033	266429-2	自攻螺絲 3X16		9				
A01A	123488-8	NOZZLE ASSEMBLY		1				
A01B	123486-2	吸塵頭(白)		1				
A01C	123539-7	NOZZLE ASSEMBLY		1				
C10	451410-8	滾輪		4				
C20	268208-4	銷3		4				
C30	424096-1	擦拭布		1				
A02	A-48511	過濾袋組（10片裝）		1				
A03A	451243-1	噴嘴 F/BCL140Z		1				
A03B	451240-7	噴嘴 F/BCL180ZW		1				
A03C	456586-6	SASH NOZZLE		1				
A04A	459356-2	PIPE		1				
A04B	459353-8	PIPE		1				
A04C	458942-6	PIPE		1				
A05A	459355-4	NOZZLE HOLDER		1				
A05B	459354-6	NOZZLE HOLDER		1				
A05C	459038-6	NOZZLE HOLDER		1				

Please order the parts with part number.

Print Date 2020/2/18