型號 HP333D CORDLESS HAMMER DRIVER DRILL

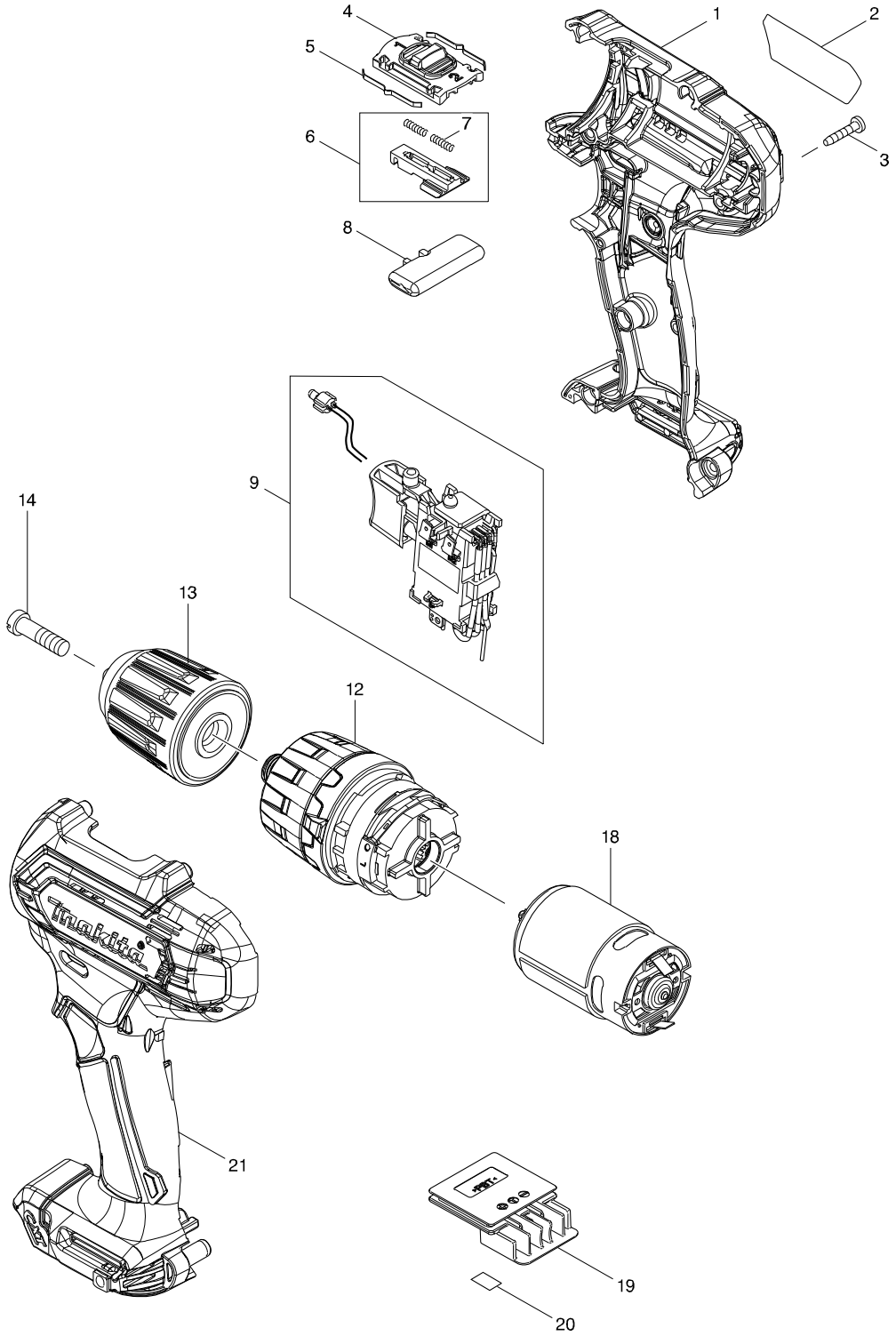

型號 HP333D CORDLESS HAMMER DRIVER DRILL

分解圖號	零件編號	品名	交換	數量	N/O	選擇1	選擇2	註記
001	183K90-5	HOUSING SET		1				
C10	252126-6	HEX. LOCKING NUT M4-7		2				
D10		INC. 21						
002	855E12-6	HP333D NAME PLATE		1				
003	266429-2	TAPPING SCREW 3X16		9				
004	459026-3	SPEED CHANGE LEVER		1				
005	232493-5	LEAF SPRING		2				
006	127127-2	CHANGE LEVER ASSEMBLY		1				
D10		INC. 7						
007	233025-1	COMPRESSION SPRING 2		2				
008	456039-5	F/R CHANGE LEVER		1				
009	632J77-3	SWITCH UNIT		1				
C10	620625-0	LED CIRCUIT		1				
012	127124-8	GEAR ASSEMBLY		1				
013	763238-5	KEYLESS DRILL CHUCK 10		1				
014	251468-5	- FLAT HEAD SCREW M6X22		1				
018	629395-8	DC MOTOR		1				
019	644813-5	TERMINAL		1				
020	855E19-2	HP333D SERIAL NO. LABEL		1				
021	183K90-5	HOUSING SET		1				
C10	252126-6	HEX. LOCKING NUT M4-7		2				
D10		INC. 1						
A01	251314-2	+ SCREW M4X12		1				
A02	346909-5	HOOK		1				
A03	784202-3	PHILLIPS BIT 2-45		1				
A04B	821661-1	PLASTIC CARRYING CASE		1				
C10	417724-5	LATCH		2				
A05B	818P44-0	HP333DSYE MODEL NO. LABEL		1				
A08B	456128-6	BATTERY COVER		1				
A09B	***DC10SB	DC10SB BATTERY CHARGER		1				
D10		COMPO-PARTS						
A10B	197943-6	BATTERY BL1016 SET		2				
A11	163400-6	HANDSTRAP		1	*			
E02	163400-6	HANDSTRAP		1				

請訂購一個零件。

列印日期 2019/01/21